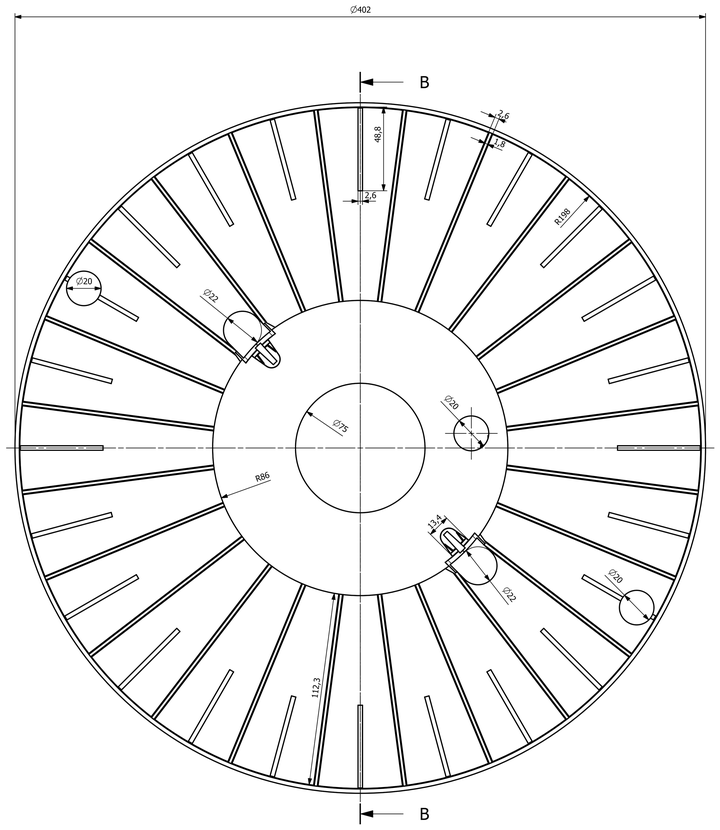

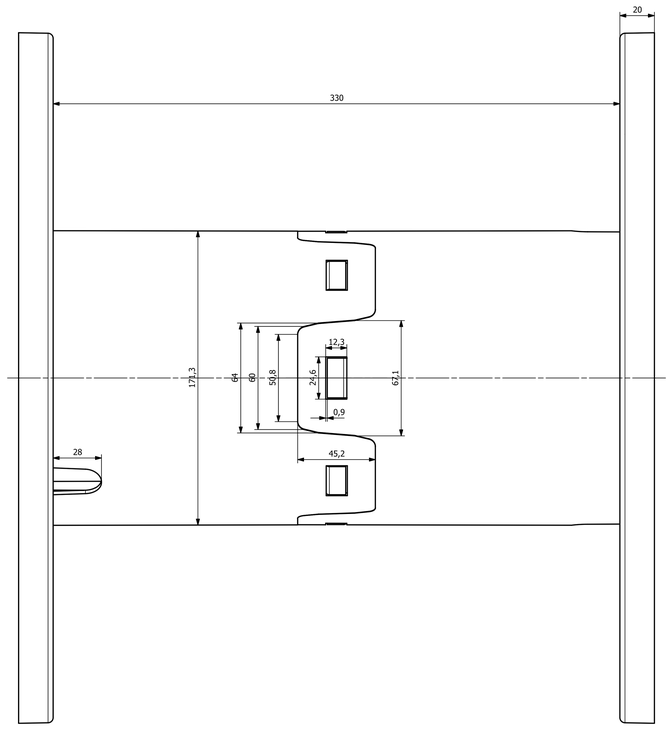

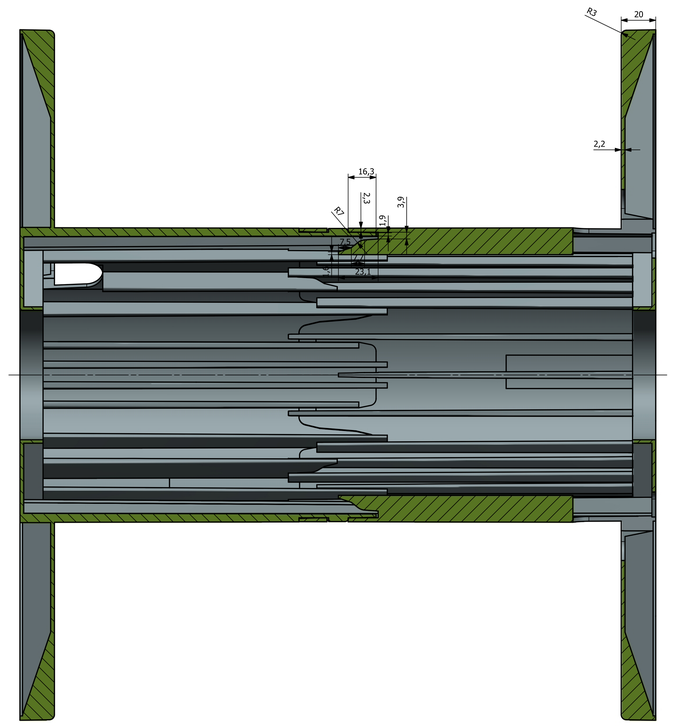

SECTION B-B

A

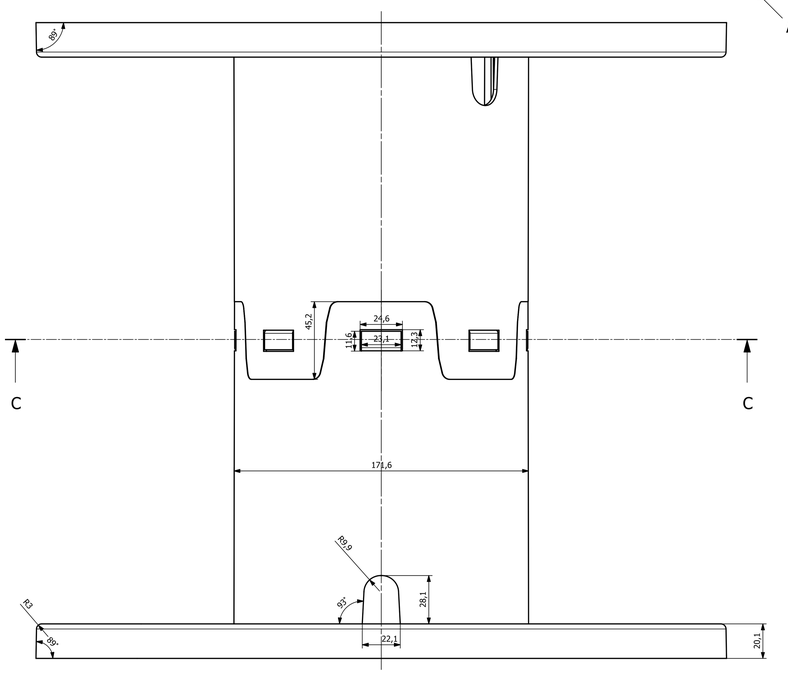

VIEW A

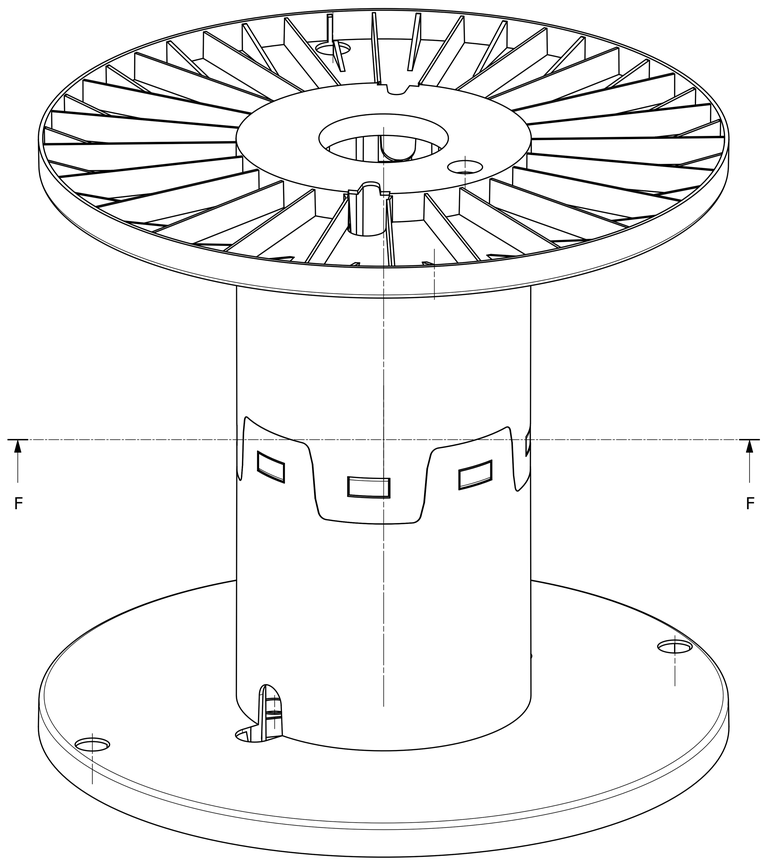

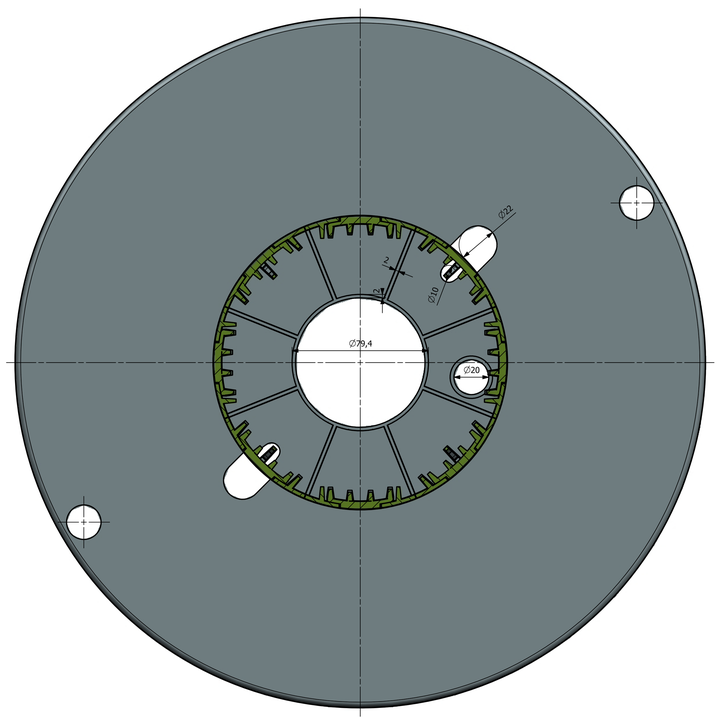

SECTION C-C

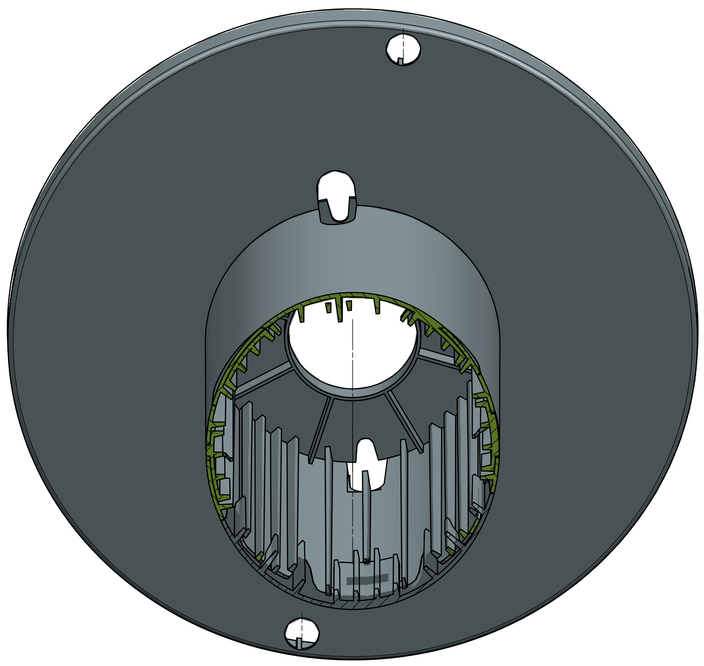

SECTION F-F

CAP 400 330 MAKARA